Electronic Copy

CI/SfB

(16.2) Hi2

BRITISH BOARD OF AGRÉMENT
TECHNICAL APPROVALS FOR CONSTRUCTION

GEOTECH & COASTAL Engineering

Tel: 087-6281871
Email: info@geo-coastal.ie
Website: www.geo-coastal.ie

Agrément Certificate No 95/3115
*Third issue**

Designated by Government to issue European Technical Approvals

PERMACRIB RETAINING WALLS

Murs de soutènement
Stützmauer

Product

- *THIS CERTIFICATE RELATES TO PERMACRIB RETAINING WALLS, A RANGE OF TIMBER CRIB EARTH RETAINING WALLS.*
- *The products are marketed worldwide by the Certificate holder.*
- *It is essential that installation is carried out in accordance with the Certificate holder's instructions and the requirements of this Certificate.*

Regulations

1 The Building Regulations 2000 (as amended) (England and Wales)

The Secretary of State has agreed with the British Board of Agrément the requirements of the Building Regulations to which retaining walls can contribute in achieving compliance. In the opinion of the BBA, Permacrib Retaining Walls, if used in accordance with the provisions of this Certificate, will contribute to meeting the relevant requirements.

Requirement:	A1	Loading
Comment:		The walls have sufficient strength and stability provided they are designed in accordance with sections 9.1 to 9.17 of this Certificate.
Requirement:	Regulation 7	Materials and workmanship
Comment:		The walls are acceptable. See sections 11.1 to 11.3 of this Certificate.

In addition to the contribution Permacrib Retaining Walls can make to meeting the relevant requirements, the following comments should be noted:

Requirement:	A2	Ground movement
Comment:		The effect on buildings adjacent to the walls will need to be considered.

2 The Building (Scotland) Regulations 2004

In the opinion of the BBA, Permacrib Retaining Walls, if used in accordance with the provisions of this Certificate, will satisfy or contribute to satisfying the various Regulations and related Mandatory Standards as listed below.

Regulation:	8	Fitness and durability of materials and workmanship
Regulation:	8(1)	Fitness and durability of materials and workmanship
Comment:		The walls can contribute to a construction satisfying this Regulation. See sections 11.1 to 11.3 and the *Installation* part of this Certificate.
Regulation:	9	Building standards — construction
Standard:	1.1(a)	Structure
Comment:		The walls have sufficient strength and stability provided they are designed in accordance with the requirements of sections 9.1 to 9.17 of this Certificate, with reference to clause 1.1.1[(1)(2)] of this Standard. (1) Technical Handbook (Domestic). (2) Technical Handbook (Non-Domestic).

3 The Building Regulations (Northern Ireland) 2000

In the opinion of the BBA, Permacrib Retaining Walls, if used in accordance with the provisions of this Certificate, will satisfy or contribute to satisfying the various Building Regulations as listed below.

Regulation:	B2	Fitness of materials and workmanship
Comment:		The walls are acceptable. See sections 11.1 to 11.3 of this Certificate.
Regulation:	D1	Stability
Comment:		The walls have sufficient strength and stability provided they are designed in accordance with the requirements of sections 9.1 to 9.17 of this Certificate.

4 Construction (Design and Management) Regulations 1994 (as amended) Construction (Design and Management) Regulations (Northern Ireland) 1995 (as amended)

Information in this Certificate may assist the client, planning supervisor, designer and contractors to address their obligations under these Regulations.

See sections: *5 Description* (5.4) and *6 Delivery and site handling* (6.2 and 6.3).

Technical Specification

5 Description

5.1 Permacrib Retaining Walls comprise interlocking, prefabricated, preservative-treated, Radiata Pine timber headers and stretchers and ancillary components of header support blocks. The stretchers form the front and back of the wall and the headers tie the two faces together (see Figure 1).

Figure 1 General layout

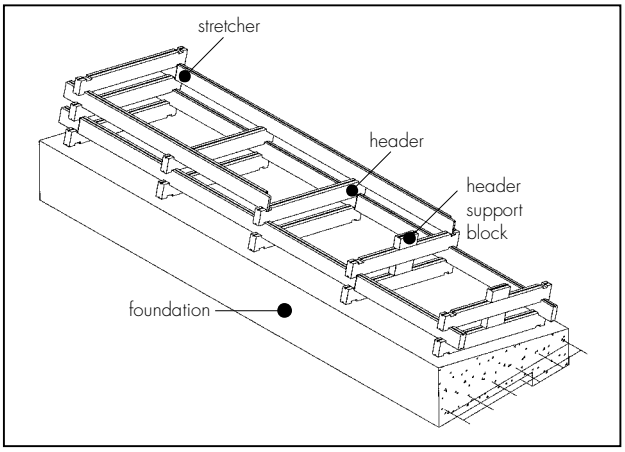

5.2 The wall system is available in eight specifications: models 600, 750, 900, 1050, 1200, 1350, 1500 and 1650 (the number indicates the header length in mm). The size of stretchers and headers used depends on the model selected (see Table 1). Stretchers are available in various lengths depending on the header thickness used (see Figure 2).

5.3 Header support blocks are available with profile dimensions to match the stretchers and headers (see section 9.15).

Table 1 Stretcher/header size (cross-section)

	Stretcher/header size (mm)	
Model	Depth	Width
600	95	36
750	95	36
900	95	36
1050	95	46
1200	95	46
1350	95	46
1500	95	60
1650	95	60

Figure 2 Components

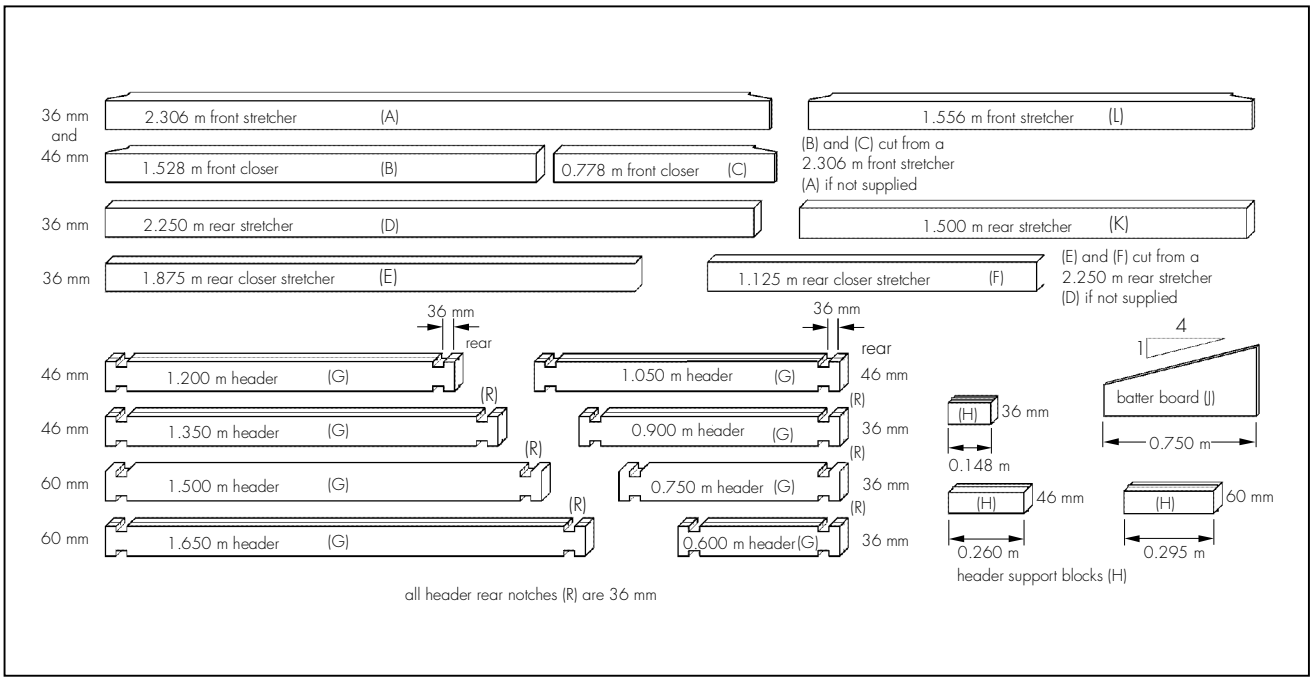

5.4 All timber is treated with high-concentration copper azole (HCCA) preservative to a level exceeding the minimum requirements of BS EN 335-1 : 1992 of European Hazard, Class 4.

5.5 Quality control on incoming timber includes visual examination and grading, checks on moisture content and dimensions. During manufacture controls include visual and dimensional checks and monitoring the retention of preservative.

6 Delivery and site handling

6.1 The members are delivered to site banded together on pallets.

6.2 Routine precautions of wearing gloves and washing hands after handling are required for the treated timber. Precautions against dust inhalation and eye contact are necessary when the treated timber is machine-cut or crafted, but Permacrib members are supplied ready for assembly and such operations are not normally necessary.

6.3 If members are cut on site, the cut ends should be generously brushed with a wood-preservative approved by the Certificate holder.

Design Data

7 General

Permacrib Retaining Walls are satisfactory for use in providing an earth-retaining structure with stability achieved through interaction of the crib components and the granular infill.

8 Practicability of installation

8.1 The walls are easily installed by methods commonly used in civil engineering practice.

8.2 The timber members can withstand normal site handling and fixing, but if damaged must not be used.

9 Structural performance

9.1 The design method used is generally in accordance with BS 8002 : 1994 and employs the monolith theory (gravity walls) for calculating external stability.

9.2 The purpose the retaining wall has to fulfil, the variable nature of the backfill and surrounding soil, and individual site conditions have to be regarded as a whole. The site-specific parameters relating to the angle of internal friction and unit weight of the retained soil and the allowable bearing pressure should be obtained by site investigations, laboratory testing or assessment. For these reasons it has been assumed that the design and supervision of the construction will be entrusted to a chartered civil or structural engineer, or other suitably qualified person familiar with the site, to ensure that the parameters used in the design are appropriate to each application.

9.3 In-situ soil conditions can vary from those assumed in design. Therefore, it is recommended that these conditions be inspected immediately prior to and, if necessary, during wall construction, to ensure that any variation is noted and the design reassessed accordingly.

9.4 Consideration should be given to the requirements set out in BS 8002 : 1994, in particular Section 4, Clause 4.2.7.

9.5 The wall model selected is dependent upon the soil type and conditions, the height of soil to be retained, additional loads imposed on the wall, the design factors of safety and any limitations specified by the client.

9.6 Typical wall heights for each model are given in Table 2. Data presented are for general guidance only (see section 9.2).

Table 2 Typical wall heights

Model	Wall height (m)
600	1.61
750	2.42
900	3.06
1050	3.54
1200	4.19
1350	4.83
1500	5.13
1650	5.96

9.7 The typical heights given in Table 2 are based upon the wall being constructed to a batter of 1 in 4 (horizontal:vertical), with appropriate factors of safety against overturning and sliding at the underside of the Permacrib/top-of-foundation interface. It is assumed that the concrete has a rough finish and the angle of friction between the infilled Permacrib and the concrete is taken as 30°. The angle of internal friction (ϕ_w) of the wall infill and backfill has been taken as 35°. Passive resistance is ignored. Unit weight of the Permacrib is taken as 18 kNm^{-3}. The position of the resultant is maintained within the middle third.

9.8 The maximum imposed foundation pressures for the wall heights and loading conditions given in Table 2 will not usually exceed the values given in Table 3.

Table 3 Maximum imposed foundation pressure

Model	Maximum bearing pressure (kNm^{-2})
600	75
750	100
900	125
1050	150
1200	175
1350	200
1500	Specific design
1650	Specific design

Figure 3 Notation

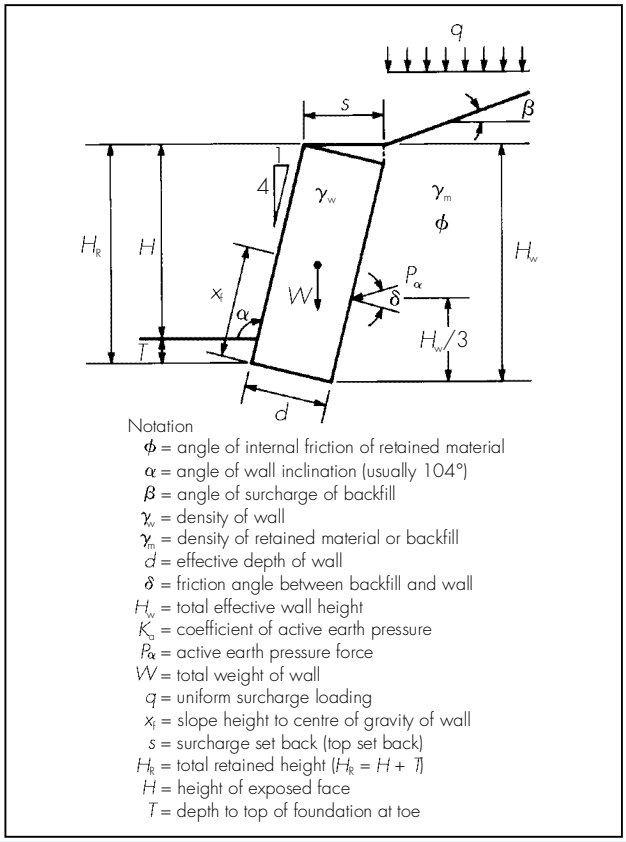

9.9 Typical values for the angle of internal friction are given in Table 4. The values given for clay soils apply only to intact soil; much lower values apply if the clay has been sheared by previous ground movements or where poorly compacted clay fill is involved (see section 9.2).

Table 4 Typical design values of angle of internal friction

Soil type		Angle of internal friction (ϕ)
Clay		
plasticity index	15	30°
	30	25°
	50	20°
	80	15°
Silt and silty sand, loose sand		30°
Dense sand and sandy gravel		35°
Dense, well-graded gravel or rock		40°

9.10 Due to the variable nature of soils this assessment does not include consideration of foundations to the walls. The bearing capacity of the ground and possible sliding at the underside of the foundation or through the underlying soils should be considered separately. Guidance is given in BS 8002 : 1994, Section 4.2.2.

9.11 The walls are flexible and can accommodate differential settlement. Therefore, the effect this may have on adjacent structures should be considered.

9.12 Where an excavation is made to accommodate a wall, the undisturbed in-situ material may have differing properties to those of

the backfill. This must be taken into consideration in the design.

9.13 The retaining wall is considered to be surcharged by any loads or backfill material or retained ground above a horizontal plane, projected behind and level with the top of the wall for a distance equal to the height of the wall.

9.14 Backfilling should be in accordance with BS 6031 : 1981.

9.15 The requirements for the inclusion of header support blocks are given in Table 5.

9.16 Where the backfill is free-draining and extends to the critical failure plane the possibility of hydrostatic pressure above the lowest drainage point may be excluded from the design. However, where seepage above wall-base level is anticipated or found during construction, specialist advice should be sought.

9.17 When used in areas accessible to vehicles, consideration should be given to protection against damage by vehicle impacts.

10 Maintenance

10.1 There are no specific maintenance requirements for the retaining wall components. However periodic inspections should be carried out for evidence of physical damage, casual plant growth or crib in-fill contamination from outside sources.

10.2 Any damage should be rectified promptly. The techniques for repair are not covered by this Certificate and advice should be sought from the Certificate holder.

10.3 Any plant growths, which are not within areas approved in the original design, should be removed to prevent accumulation of leaf litter and other organic debris and to avoid disturbance by root growth.

10.4 The development of adjacent planted areas or landscaping should include precautions to avoid contamination of the crib in-fill by fines or organic debris.

10.5 Contamination of the in-fill by outside materials may impair drainage or introduce unusual chemicals. Remedial action procedures are not covered by this Certificate and advice should be sought from the Certificate holder.

11 Durability

11.1 The components specified are to be made from Radiata Pine timber which is impregnated with a high concentration copper azole preservative to meet the requirements of BS 8417 : 2003 for service in European Hazard, Class 4. The in-fill is specified to provide effective drainage around the crib components.

11.2 This combination, under UK conditions, has been assessed as appropriate for a Design Service Life of 60 years.

11.3 It should be recognised that this is an indication of the minimum expectation of performance, based upon the design, materials and maintenance used for the system and under normal UK conditions of use. It is recognised that Actual Service Lives may commonly exceed the Design Service Life.

Installation

12 General

12.1 The preparation, installation and completion of the Permacrib Retaining Walls must be in accordance with the manufacturer's recommendations given in *Permacrib Assembly Instructions* (ENG/A/11/00). Excavations must be carried out generally in accordance with BS 6031 : 1981, with particular attention paid to safety procedures.

12.2 The concrete foundations must be cast with the surface of the concrete left rough to reduce the risk of sliding failure, and the wall erected to give a batter on the wall of 1 (horizontal) in 4 (vertical). Construction of the wall must not start until the concrete has reached a minimum strength of 10 Nmm^{-2} or twice the stress to which it will be subjected.

12.3 A continuous subsoil drain must be provided at the rear of the base slab to carry the water to an outfall.

Table 5 Header support block requirements

Model	600	750	900	1050	1200	1350	1500	1650
No of HSBs used	Depth below top of wall (m)							
0	0–1.16	0–1.16	0–1.16	0–1.33	0–1.33	0–1.33	0–1.49	0–1.49
1	1.16–2.66	1.16–2.32	1.16–2.16	1.33–2.99	1.33–2.82	1.33–2.66	1.49–3.15	1.49–2.99
2	2.66–3.98	2.32–3.32	2.16–2.99	2.99–4.65	2.82–4.15	2.66–3.82	3.15–4.81	2.99–4.48
3	–	3.32–4.48	2.99–3.82	4.65–6.31	4.15–5.64	3.82–5.15	4.81–6.47	4.48–5.98
4	–	–	3.82–4.65	–	–	5.15–6.31	6.47–8.13	5.98–7.47
5	–	–	–	–	–	–	–	7.47–8.96

13 Procedure

13.1 The base line of headers is set out at 750 mm centres. If necessary, mortar is used to ensure support (see Figure 4).

13.2 The first row of stretchers is installed, those stretchers front-facing are placed with the rough sawn side showing, and where specified, header support blocks are positioned.

13.3 The next layer of headers is installed on the stretchers directly in line above the base headers. It must be ensured that all joints in the stretchers are tightly butted and with the scarf joints between the stretchers always located at a header position. Hit-and-miss rear stretchers may be used in the top 3 m of wall height (see Figure 4).

Figure 4 Typical layout

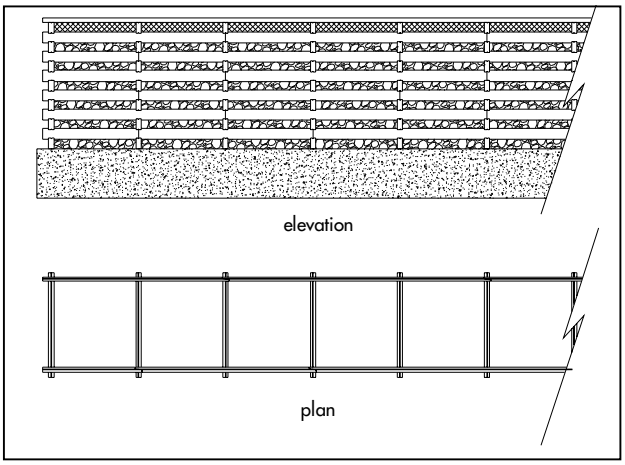

13.4 After construction of a maximum of five courses but preferably at each course, where a course is a layer of both headers and stretchers, the units are infilled in layers 200 mm to 300 mm thick. The area behind the wall is progressively backfilled in accordance with BS 6031 : 1981.

13.5 The crib fill material must be clean, free-draining, well-graded, crushed natural gravel, crushed rock (other than argillaceous rock), river gravel, recycled aggregate (except asphalt) or crushed concrete. The maximum size must be 100 mm and with no greater than 10% by weight passing through a 150 μm (micronmeter) sieve.

13.6 The temporary cut face should be benched prior to placing the backfill.

13.7 When the full height of the wall is reached, a row of stretchers is laid each on their side along the top front edge and secured in position with 100 mm long stainless steel nails.

13.8 On completion of the wall, topsoiling and landscaping can be undertaken if required.

Technical Investigations

The following is a summary of the technical investigations carried out on Permacrib Retaining Walls.

14 Investigations

14.1 The design procedures were examined and compared with established engineering practice.

14.2 Existing information relating to the suitability and retention of preservative was examined.

14.3 A user survey and visits to established sites were conducted to evaluate performance in use.

14.4 Visits were made to sites in progress to assess the practicability of installation.

14.5 The manufacturing process was examined, including the methods adopted for quality control, and details were obtained of the quality and composition of materials used.

Bibliography

BS 6031 : 1981 *Code of practice for earthworks*

BS 8002 : 1994 *Code of practice for earth retaining structures*

BS 8417 : 2003 *Preservation of timber — Recommendations*

BS EN 335-1 : 1992 *Durability of wood and wood-based products — Definition of hazard classes of biological attack — General*

Conditions of Certification

15 Conditions

15.1 This Certificate:

- relates only to the product/system that is named and described on the front page
- is granted only to the company, firm or person named on the front page — no other company, firm or person may hold or claim any entitlement to this Certificate
- is valid only within the UK
- has to be read, considered and used as a whole document — it may be misleading and will be incomplete to be selective
- is copyright of the BBA
- is subject to English law.

15.2 References in this Certificate to any Act of Parliament, Regulation made thereunder, Directive or Regulation of the European Union, Statutory Instrument, Code of Practice, British Standard, manufacturers' instructions or similar publication, are references to such publication in the form in which it was current at the date of this Certificate.

15.3 This Certificate will remain valid for an unlimited period provided that the product/system and the manufacture and/or fabrication including all related and relevant processes thereof:

- are maintained at or above the levels which have been assessed and found to be satisfactory by the BBA
- continue to be checked as and when deemed appropriate by the BBA under arrangements that it will determine
- are reviewed by the BBA as and when it considers appropriate.

15.4 In granting this Certificate, the BBA is not responsible for:

- the presence or absence of any patent, intellectual property or similar rights subsisting in the product/system or any other product/system
- the right of the Certificate holder to manufacture, supply, install, maintain or market the product/system
- individual installations of the product or system, including the nature, design, methods and workmanship of or related to the installation
- the actual works in which the product/system is installed, used and maintained, including the nature, design, methods and workmanship of such works.

15.5 Any information relating to the manufacture, supply, installation, use and maintenance of this product/system which is contained or referred to in this Certificate is the minimum required to be met when the product/system is manufactured, supplied, installed, used and maintained. It does not purport in any way to restate the requirements of the Health & Safety at Work etc Act 1974, or of any other statutory, common law or other duty which may exist at the date of this Certificate or in the future; nor is conformity with such information to be taken as satisfying the requirements of the 1974 Act or of any present or future statutory, common law or other duty of care. In granting this Certificate, the BBA does not accept responsibility to any person or body for any loss or damage, including personal injury, arising as a direct or indirect result of the manufacture, supply, installation, use and maintenance of this product/system.

BBA BRITISH BOARD OF AGRÉMENT
TECHNICAL APPROVALS FOR CONSTRUCTION

In the opinion of the British Board of Agrément, Permacrib Retaining Walls are fit for their intended use provided they are installed, used and maintained as set out in this Certificate. Certificate No 95/3115 is accordingly awarded to Phi Group Ltd.

On behalf of the British Board of Agrément

Date of Third issue: 27th November 2006

Chief Executive

**Original Certificate issued 28th March 1995. This revised version includes changes to the timber preservation treatment and the addition of associated safety precautions, revision of model reference numbers and addition to the range and, therefore, increase in wall heights allowed, revision of* Durability *statement, reference to revised Regulations and Standards and new* Conditions of Certification.

British Board of Agrément
P O Box No 195, Bucknalls Lane
Garston, Watford, Herts WD25 9BA
Fax: 01923 665301

e-mail: mail@bba.star.co.uk
website: www.bbacerts.co.uk

For technical or additional information, contact the Certificate holder (see front page).
For information about the Agrément Certificate, including validity and scope, tel: Hotline 01923 665400, or check the BBA website.